ST. ANNE'S COLLEGE OF ENGINEERING AND TECHNOLOGY

(Accredited by NAAC, Approved by AICTE, New Delhi. Affiliated to Anna University, Chennai)

ANGUCHETTYPALAYAM, PANRUTI – 607 106.

DEPARTMENT OF

ELECTRONICS AND COMMUNICATION ENGINEERING

QUESTION BANK

EC 3351 - CONTROL SYSTEMS

Prepared by

Mrs. J. ARUL MARTINAL, AP / EEE

UNIT I - SYSTEMS COMPONENTS AND THEIR REPRESENTATION				
Control System: Terminology and Basic Structure-Feed forward and Feedback control theory Electrical and Mechanical Transfer Function Models-Block diagram Models-Signal flow graphs models-DC and AC servo Systems-Synchronous -Multivariable control system.				
PART –A				
Q.no	**Questions**	**BT Level**	**Competence**	**Course Outcome**
1.	What is block diagram? State its components.	**BTL 1**	Remember	CO1
2.	Formulate the force balance equation for ideal dash pot and ideal spring element**.**	**BTL 6**	Create	CO1
3.	Define transfer function.	**BTL 1**	Remember	CO1
4.	What are the basic elements in control systems?	**BTL 1**	Remember	CO1
5.	For the mechanical system shown in Fig. draw the corresponding Force- Voltage analogy circuit.	**BTL 3**	Apply	CO1
6.	Analyse the need of electrical zero position in synchro transmitter.	**BTL 4**	Analyze	CO1
7.	The open loop gain of a system increases by 25%. Calculate the change in the closed loop gain assuming unity feedback.	**BTL 3**	Apply	CO1
8.	Develop Masons gain formula to find the system transfer function.	**BTL 6**	Create	CO1
9.	What is the open loop DC gain of a unity feedback control system having closed loop transfer function as $(s+4)/(s^2+7s+13)$.	**BTL 5**	Evaluate	CO1
10.	What are the disadvantages of block diagram representation?	**BTL 1**	Remember	CO1
11.	Compare Signal Flow Graph approach with block diagram reduction technique of determining transfer function.	**BTL 4**	Analyze	CO1

12.	Can we use servomotor for position control? Support the answer with necessary details.	**BTL 5**	Evaluate	CO1
13.	Give the reason for preferring negative feedback control system.	**BTL 2**	Understand	CO1
14.	Tabulate the parameters of the translational and rotational mechanical system	**BTL 1**	Remember	CO1
15.	Compare open loop and closed loop system.	**BTL 4**	Analyze	CO1
16.	Define linear system.	**BTL 1**	Remember	CO1
17.	Describe the principle of superposition.	**BTL 2**	Understand	CO1
18.	Distinguish sink and source.	**BTL 2**	Understand	CO1
19.	Classify major types of control systems based on feedback.	**BTL 3**	Apply	CO1
20.	Discuss any one application of synchro.	**BTL 2**	Understand	CO1
	PART – B			
1.	**(i)** For the block diagram shown in figure. determine the overall transfer function.**(6)**	**BTL 2**	Understand	CO1
	(ii) Develop the transfer function of field Controlled DC servomotor and define transfer function.**(7)**	**BTL 6**	Create	CO1
2.	For the block diagram shown in figure, **(i)** Convert into simple loop using Block Diagram Reduction Method. **(6)** **(ii)** Apply Signal flow graph method and verify the transfer function obtained using block diagram reduction method. **(7)**	**BTL 4** **BTL 3**	Analyze Apply	CO1

	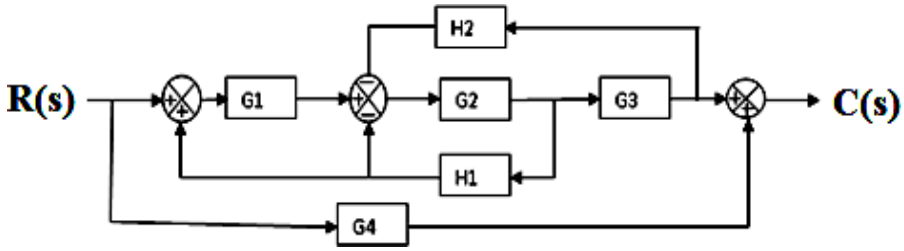			
3.	**(i)** Draw the force-voltage analogy and force current analogy for the mechanical system shown in figure.**(7)** 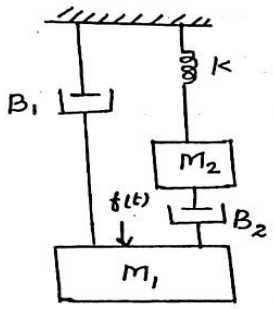 **(ii)** Explain armature controlled DC servomotor with relevant block diagram. **(6)**	**BTL 3**	Understand	CO1
4.	**(i)** Develop the transfer function using Mason's Gain formula for the system whose signal flow graph is shown in figure.**(7)** 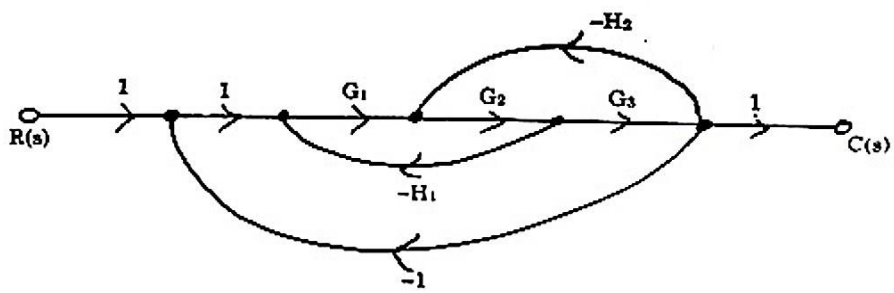	**BTL 6**	Create	CO1
	(ii) Explain open loop and closed loop systems with suitable examples. **(6)**	**BTL 1**	Remember	CO1

5.	Using Mason's gain formula, find the overall gain C(s)/R(s) for the signal flow graph shown in figure.**(13)** 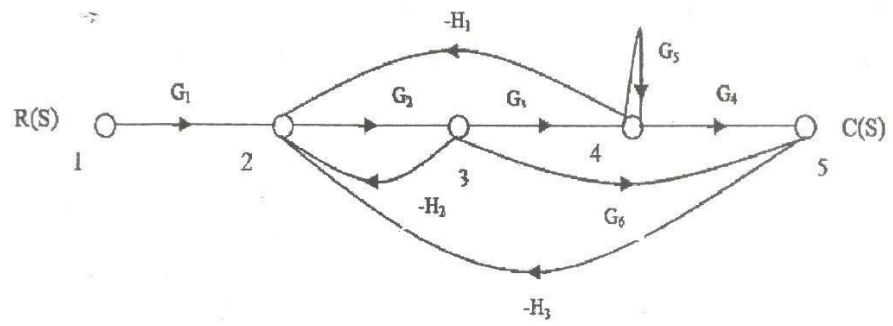 	**BTL 2**	Understand	CO1
6.	Obtain the transfer function of mechanical systems shown in the following figure. **(13)** 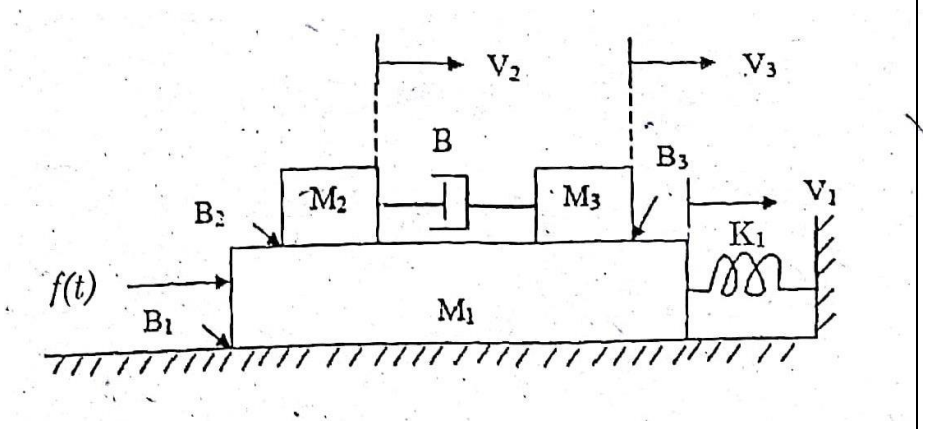 	**BTL 1**	Remember	CO1
7.	Develop the transfer function for the block diagram shown in fig. using **(i)** Block diagram reduction technique.**(6)** **(ii)** Mason's Gain Formula.**(7)** 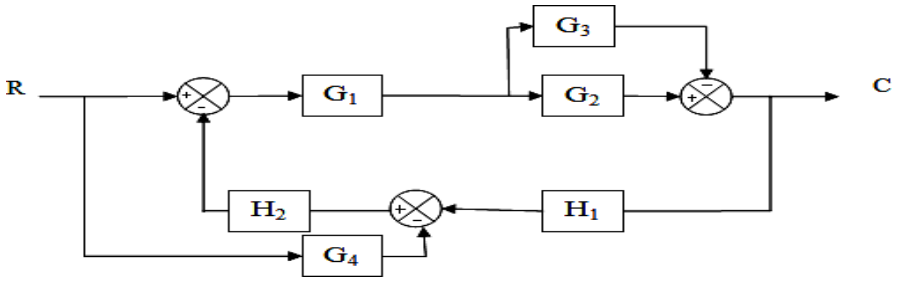 	**BTL 6**	Create	CO1
8.	**(i)** Explain all the properties of signal flow graph.**(5)**	**BTL 4**	Analyze	CO1
	(ii) Summarize the rules followed in block diagram reduction technique.**(8)** **(iii)**	**BTL 5**	Evaluate	CO1
9.	Obtain the transfer function C(s) / R(s) for the block diagram shown			

	in figure using block diagram reduction technique. **(13)** 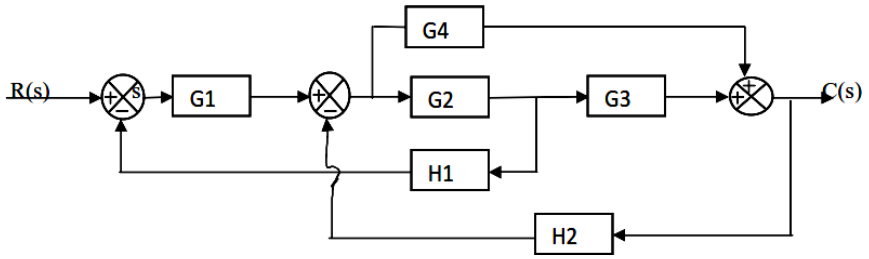	**BTL 6**	Remember	CO1
10.	Write the differential equations governing the mechanical system shown in figure. Also draw the force voltage and force current analogous circuit and verify by writing mesh and node equations. **(13)**	**BTL 2**	Understand	CO1
11.	Find the overall gain of the system whose signal flow graph is shown in fig **(13)**	**BTL 3**	Apply	CO1
12.	**(i)** Develop the transfer function of AC servo motor. **(7)**	**BTL 6**	Create	\ CO1
	(ii) With neat diagram, examine the working principle of field Controlled DC servo motor. **(6)**	**BTL 1**	Remember	CO1
13.	**(i)** Derive the Transfer Function of thermal system consists of a thermometer inserted in a liquid bath. **(6)**	**BTL 3**	Apply	CO1

	(ii) Compare DC motor and DC Servomotor and list out the applications of DC servomotor**. (7)**	**BTL 4**	Analyze	CO1
14.	**(i)** List out the assumptions made in ideal thermal system.**(3)**	**BTL 1**	Remember	CO1
	(ii) Write the basic requirements of servomotors**.(3)**	**BTL 1**	Remember	CO1
	(iii) What is analogous system? Compare Mechanical and Electrical analogous system.**(7)**	**BTL 4**	Analyze	CO1
	PART – C			
1.	Write the differential equations governing the mechanical translational system shown in fig. Draw the electrical equivalent analogy circuit. **(15)**	**BTL 4**	Analyze	CO1
2.	For the system represented by block diagram shown in fig., Obtain the closed loop transfer function C(s) / R(s), when the input R(s) is applied instation I.**(15)** 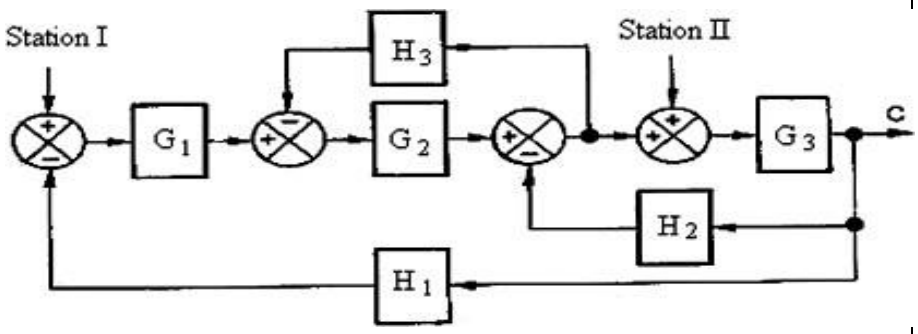	**BTL 6**	Create	CO1
3.	Determine transfer function $y_2(s)$ / f(s). **(15)**	**BTL 4**	Analyze	CO1

	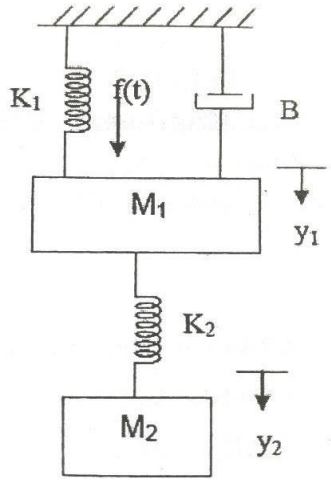			
4.	Write the differential equations governing the mechanical rotational system as shown in fig. Draw the both electrical analogous circuits. **(15)**	**BTL 6**	Create	CO1

UNIT II - TIME RESPONSE ANALYSIS				
Transient response-steady state response-Measures of performance of the standard first order and second order system-effect on an additional zero and an additional pole-steady error constant and system- type number-PID control-Analytical design for PD, PI,PID control systems.				
PART – A				
Q.no	**Questions**	**BT Level**	**Competence**	**Course Outcome**
1.	Define maximum peak overshoot.	**BTL 1**	Remember	CO2
2.	Assess the standard test signals employed for time domain studies.	**BTL 5**	Evaluate	CO2
3.	What is the type and order of the following system $\frac{C(S)}{R(S)} = \frac{10}{s^3(s^2+2s+1)}$	**BTL 1**	Remember	CO2

4.	Give the relation between static and dynamic error coefficients.	**BTL2**	Understand	CO2
5.	For a system by $\frac{C(S)}{R(S)} = \frac{16}{s^2 + 8s + 16}$. Find the nature of the time response and justify.	**BTL 4**	Analyze	CO2
6.	How centroid of the asymptotes found in root locus technique?	**BTL 4**	Analyze	CO2
7.	The impulse response of a system is $c(t) = -te^{-t} + 2e^{-t}$ (t>0). Find its open loop transfer function.	**BTL 6**	Create	CO2
8.	Distinguish between type and order of the system.	**BTL 2**	Understand	CO2
9.	List the standard test signals used in control system.	**BTL 1**	Remember	CO2
10.	Mention the effects of Proportional Integral (PI) controller.	**BTL 5**	Evaluate	CO2
11.	Distinguish between the steady state and transient response of the system.	**BTL 2**	Understand	CO2
12.	Explain steady state error.	**BTL 5**	Evaluate	CO2
13.	How is a system classified depending on the value of damping?	**BTL 4**	Analyze	CO2
14.	Define settling time.	**BTL 1**	Remember	CO2
15.	For servo mechanisms with open loop transfer function is given by $G(s) = 1 / (s^2 + 2s + 3)$. Calculate position error and steady state error for a unit step input.	**BTL 3**	Apply	CO2
16.	The open loop transfer function of a unity feedback control system is given by G(s) = k/s(s+1). If gain k is increased to infinity, then damping ratio.	**BTL 2**	Understand	CO2
17.	What are the generalized error coefficients? How they are determined?	**BTL 1**	Remember	CO2
18.	The unit impulse response of second order system is $(1/6) * e^{-0.8t} \sin(0.6t)$. Find the natural frequency.	**BTL 6**	Create	CO2
19.	The system function N(s) = V(s)/I(s) = (s+3)/(4s+5). The system is initially at rest. If the excitation i(t) is a unit step, which of the following is the final value?	**BTL 1**	Remember	CO2
20.	How location of poles is related to stability?	**BTL 3**	Apply	CO2
	PART – B			
1.	**(i)** Evaluate the unit step response of the following system. **(7)**	**BTL 5**	Evaluate	CO2

	$\frac{C(S)}{R(S)} = \frac{10}{s^2 + 2s + 10}$			
	(ii) A Unity feedback control system is characterized by open loop transfer function $G(s) = \frac{10}{s(s+2)}$. Calculate its time response for step input of 12 units. **(6)**	**BTL 3**	Apply	CO2
2.	Derive the expression for second order system for under damped case and when the input is unit step. **(13)**	**BTL 2**	Understand	CO2
3.	Derive the expression for the unit step response of following second order systems.**(7 + 6)** **(i)** Critically damped system **(ii)** Over damped system	**BTL 2**	Understand	CO2
4.	Derive Expressions for the following time domain specifications of second order under damped system due to unit step input. **(i)** Rise time. **(3)** **(ii)** Peak time. **(3)** **(iii)** Delay time. **(3)** Peak overshoot. **(4)**	**BTL 2**	Understand	CO2
5.	The unity feedback system characterized by open loop transfer function $G(s) = \frac{K}{s(s+10)}$. Evaluate the gain K such that damping ratio will be 0.5 and find time domain specifications for a unit step input.**(13)**	**BTL 5**	Evaluate	CO2
6.	**(i)** For a unity feedback control system $G(s) = \frac{10(s+2)}{s^2(s+1)}$. Calculate the position, velocity and acceleration error constant. **(7)**	**BTL 3**	Apply	CO2
	(ii) Explain the graphical and mathematical representation of following test signals (a) step input (b) Ramp Input (c) Parabolic input (d) Impulse input**.** Also point out the	**BTL 4**	Analyze	CO2

	relationship between these test signals if any.**(6)**			
7.	A positional control system with velocity feedback is shown. Determine the response of the system for unit step input.**(13)** 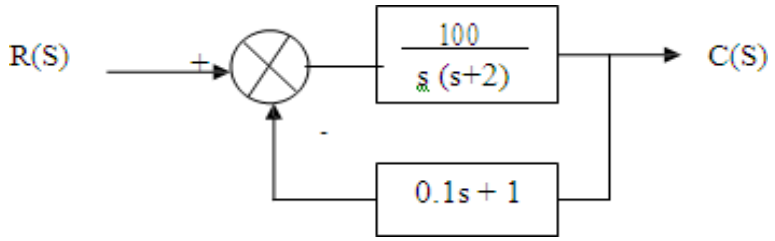 	**BTL 1**	Remember	CO2
8.	A unity feedback system us characterized by the open loop transfer function $G(s) = \dfrac{1}{s(0.5s+1)(0.2s+1)}$. (i) Write the closed loop transfer function C(s)/ R(s) (ii) Find damping factor, natural frequency of the system (iii) Determine rise time, peak time and peak overshoot of the system (iv) Calculate steady state error due to unit step. **(13)**	**BTL 5**	Evaluate	CO2
9.	**(i)** Explain briefly the PI controller action with block diagram ~~and obtain its~~ transfer function model. List out its advantages and disadvantages.**(7)**	**BTL 4**	Analyze	CO2

	(ii) Describe the effect of adding PD and PID in feedback control systems.**(6)**	**BTL 1**	Remember	CO2
10.	Calculate the static error coefficients for a system whose transfer function is $G(s)H(s) = \frac{10}{s(1+s)(1+2s)}$. And also Calculate the steady state error for $r(t) = 1 + t + \frac{t^2}{2}$. (**13**)	**BTL 3**	Apply	CO2
11.	**(i)** Evaluate the dynamic error coefficients of the following system $G(s) = \frac{10}{s(1+s)}$. **(8)**	**BTL 5**	Create	CO2
	(ii) Write short notes on dynamic error coefficients.**(5)**	**BTL 1**	Remember	CO2
	PART – C			
1.	**(i)** For servomechanisms, with open loop transfer function given below explain what type of input signal give riseto a steady state error and calculate their values. $G(s) = \frac{20(s+2)}{s(s+1)(s+3)}$. **(4)** $G(s) = \frac{1}{(s+2)(s+3)}$. **(4)**	**BTL 4**	Analyze	CO2
	(ii) Obtain the impulse and step response of the following unity feedback control system with open loop transfer function.**(7)** $G(s) = \frac{6}{s(s+5)}$.	**BTL 4**	Analyze	CO2
2.	A unity feedback control system has the open loop transfer function $G(s) = \frac{K}{(s+A)(s+2)}$.Find the values of K and A so that the damping ratio is 0.707 and the peak time for unit step response is 1.8 sec. **(15)**	**BTL 4**	Analyze	CO2

3.	A unity feedback control system has an open loop transfer function $G(s) = \frac{K}{s(s+2)(s+4)}$. Make a rough sketch of the root locus plot of the system, explicitly identifying the centroid, the asymptotes, the departure angles form the complex poles of G(s) and the jw – axis cross over point. By trial and error application of the angle criterion, locate a point on the locus that gives dominant closed loop poles with damping ratio of the system is 0.5. Evaluate the value of K at this point.**(15)**	**BTL 4**	Analyze	CO2

UNIT III - FREQUENCY RESPONSE AND SYSTEM ANALYSIS				
Closed loop frequency response-Performance specification in frequency domain-Frequency response of standard second order system- Bode Plot - Polar Plot- Nyquist plots-Design of compensators using Bode plots-Cascade lead compensation-Cascade lag compensation-Cascade lag-lead compensation.				
PART – A				
Q.no.	**Questions**	**BT Level**	**Competence**	**Course Outcome**
1.	A second order system has peak over shoot = 50% and period of oscillations 0.2 seconds. Find the resonant frequency?	**BTL 1**	Remember	CO3
2.	What does, a gain margin close to unity or phase margin close to zero indicate?	**BTL 4**	Analyze	CO3
3.	What are the effects and limitations of phase-lag control?	**BTL 4**	Analyze	CO3
4.	Draw the polar plot of $G(s) = \frac{1}{1+sT}$.	**BTL 3**	Apply	CO3
5.	Define phase margin and gain margin.	**BTL 1**	Remember	CO3
6.	Find the corner frequency of $G(s) = \frac{10}{s(1+0.5s)}$.	**BTL 3**	Apply	CO3
7.	Give the need for lag/lag-Lead compensation.	**BTL 2**	Understand	CO4

8.	Draw the approximate polar plot for a Type 0 second order system.	**BTL 3**	Apply	CO3
9.	Define the terms: resonant peak and resonant frequency.	**BTL 1**	Remember	CO3
10.	What is the cut-off frequency?	**BTL 1**	Remember	CO3
11.	Summarize frequency domain specifications.	**BTL 2**	Understand	CO3
12.	Discuss the correlation between phase margin and Damping factor.	**BTL 2**	Understand	CO3
13.	Draw the polar plot of $G(s) = \frac{1}{(1+s)}$.	**BTL 3**	Apply	CO3
14.	Define gain crossover frequency and phase cross over frequency.	**BTL 1**	Remember	CO3
15.	If the Bode plot crosses 180 degree line, either at very low frequencies or very high frequencies in the selected frequency range, what is the inference regarding the relationship between open loop gain and stability?	**BTL 2**	Understand	CO3
16.	Discuss how you will get closed loop frequency response from open loop response.	**BTL 2**	Understand	CO3
17.	The damping ratio and natural frequency of oscillations of a second order system is 0.3 and 3 rad/sec respectively. Calculate resonant frequency and resonant peak.	**BTL 5**	Evaluate	CO3
18.	Show the shape of polar plot for the transfer function $K/ s (1+sT_1)(1+sT_2)$	**BTL 3**	Apply	CO3
19.	Obtain the Phase angle expression of the given transfer function $GH(s) = \frac{10}{s(1+0.4s)(1+0.01s)}$.	**BTL 5**	Evaluate	CO3
20.	Realize the lead compensator using R and C network components.	**BTL 2**	Understand	CO4
PART – B				

1.	Construct bode plot for the system whose open loop transfer function is given below and evaluate (i) Gain margin (ii) Phase margin and (iii) closed loop stability **(13)** $$G(s) = \frac{100}{s(s+1)(s+2)}.$$	**BTL 5**	Evaluate	CO3
2.	Plot the bode diagram for the given transfer function and estimate the gain and phase cross over frequencies.**(13)** $$GH(s) = \frac{10}{s(1+0.4s)(1+0.1s)}.$$	**BTL 2**	Underst and	CO3
3.	Draw the polar plot of the unity feedback system whose open loop transfer function is given by $G(s) = \frac{1}{(1+s)(1+2s)}$. Determine the phase and gain margin.**(13)**	**BTL 3**	Apply	CO3
4.	Draw the bode plot of the following system and estimate gain cross over frequency. **(13)** $$GH(s) = \frac{10}{s(0.1s+1)(0.01s+1)}.$$	**BTL 2**	Underst and	CO3
5.	Using polar plot, calculate gain cross over frequency phase cross over frequency, gain margin and phase margin of feedback system with open loop transfer function **(13)** $$GH(s) = \frac{10}{s(1+0.2s)(1+0.002s)}.$$	**BTL 3**	Apply	CO3
6.	**(i)** Describe about the frequency domain specifications of a typical system. **(5)**	**BTL 1**	Remem ber	CO3
	(ii) Describe the correlation between time and frequency domain specifications.**(8)**	**BTL 1**	Remem ber	CO3
7.	Given $G(s) = \frac{Ke^{-0.2s}}{s(s+2)(s+8)}$. Draw the Bode plot and Calculate K for the following two cases: (i) Gain margin equal to 6db and (ii) Phase margin equal to 45°. **(13)**	**BTL 3**	Apply	CO3
8.	Sketch the Bode Magnitude plot for the transfer function $G(s) = \frac{Ks^2}{s(1+0.2s)(1+0.02s)}$. Hence find 'K' such that gain cross	**BTL 3**	Apply	CO3

	over frequency is 5 rad/sec. **(13)**			
9.	**(i)** What is the effect on polar plot when pole is added at origin to the transfer function? Explain. Draw the polar plot of a first order system.**(5)**	**BTL 1**	Remember	CO3
	(ii) For the following system, sketch the polar plot. $G(s) = \dfrac{500}{s(s+6)(s+9)}$. **(8)**	**BTL 3**	Apply	CO3
10.	**(i)** Derive the expression for radius and center of constant M and N circles. **(7)**	**BTL 5**	Remember	CO3
	(ii) Obtain the relation for resonance peak magnitudes $(M_r)$and resonant frequency (ω_r) in terms of damping factor (δ). **(6)**	**BTL 2**	Understand	CO3
11.	Draw the Bode plot showing the magnitude in decibels and phase angle in degrees as a function of log frequency for the transfer function. $G(s) = \dfrac{75(1+0.2s)}{s(s^2+16s+100)}$. From the Bode plot, estimate the gain cross-over frequency.**(13)**	**BTL 2**	Understand	CO3
12.	Construct the polar plot and determine the gain margin and phase margin of a unity feedback control system whose open loop transfer function is, $G(s) = \dfrac{(1+0.2s)(1+0.025s)}{s^3(1+0.005s)(1+0.001s)}$. **(13)**	**BTL 5**	Evaluate	CO3
	PART – C			
1.	The open loop transfer function of the uncompensated system is $G(s) = \dfrac{K}{s(s+2)}$. Design a lag compensator for the system so static velocity error constant K_v is 10 sec^{-1}, the phase margin $\geq 60^0$. **(15)**	**BTL5**	Evaluate	CO4

2.	Sketch the polar plot for the following transfer function and evaluate Gain cross over frequency, Phase cross over frequency, Gain margin and Phase margin for $G(s) = \dfrac{400}{s(s+2)(s+10)}$ **.(15)**	**BTL 5**	Evaluate	CO3
3.	Realize the basic compensators using electrical network and obtain the transfer function. **(15)**	**BTL 5**	Evaluate	CO3
4.	Sketch the Bode plot and hence evaluate Gain cross over frequency, Phase cross over frequency, Gain margin and Phase margin for the function $G(s) = \dfrac{10(s+3)}{s(s+2)(s^2+4s+100)}$. **(15)**	**BTL 5**	Evaluate	CO3

UNIT IV - CONCEPTS OF STABILITY ANALYSIS

Concept of stability-Bounded - Input Bounded - Output stability-Routh stability criterion-Relative stability-Root locus concept-Guidelines for sketching root locus-Nyquist stability criterion.

PART – A

Q.No	Questions	BT Level	Competence	Course Outcome
1.	What are the two notations of system stability to be satisfied for a linear time-invariant system to be stable?	**BTL 1**	Remember	CO4
2.	Why are compensators required in feedback control system? What is compensation?	**BTL 4**	Analyze	CO4
3.	Give any two limitations of Routh-stability criterion.	**BTL 2**	Understand	CO4
4.	How are the roots of the characteristic equation of a system related to stability?	**BTL 1**	Remember	CO4
5.	Examine BIBO stability.	**BTL 3**	Apply	CO4
6.	How centroid of the asymptotes found in root locus technique?	**BTL 3**	Apply	CO4

7.	State Nyquist stability criterion.	**BTL 1**	Remember	CO4
8.	What is characteristic equation?	**BTL 1**	Remember	CO4
9.	What is root locus?	**BTL 2**	Understand	CO4
10.	Evaluate the effects of adding a zero to a system?	**BTL 5**	Evaluate	CO4
11.	What conclusion can be provided when there is a row of all zeros in Routh array?	**BTL 2**	Understand	CO4
12.	Point out the regions of root locations for stable, unstable and limitedly stable systems.	**BTL 4**	Analyze	CO4
13.	Write the necessary and sufficient condition for stability.	**BTL 6**	Create	CO4
14.	How will you find the root locus on real axis?	**BTL 3**	Apply	CO4
15.	For what range of K, the following system shown in Fig is asymptotically stable?	**BTL 3**	Apply	CO4
16.	A open loop transfer function is given as $G(s) = \frac{(s+2)}{(s+1)(s-1)}$. Find the number of encirclements about '-1+j0'?	**BTL 3**	Apply	CO4
17.	What are the effects of adding open loop poles and zero on the nature of the root locus and on system?	**BTL 1**	Remember	CO4
18.	Point out some properties of Nyquist plot.	**BTL 4**	Analyze	CO4
19.	How the roots of characteristic are related to stability?	**BTL 3**	Apply	CO4

20.	What are break away points?	**BTL 4**	Analyze	CO4
	PART – B			
1.	By use of Nyquist stability criterion, discuss whether the closed loop system having the following open loop transfer function is stable or not. If not how many closed loop poles lie in the right half of s-plane? **(13)** $$G(s)H(s) = \frac{s+2}{(s+1)(s-1)}.$$	**BTL 2**	Understand	CO4

2.	The open loop transfer function of a unity feedback system is given by $G(s)H(s) = \dfrac{K}{(s+2)(s+4)(s^2+6s+25)}$. By applying the Routh criterion, find the range of values of k for which the closed loop system is stable. Calculate the values of k which will cause sustained oscillations in the closed loop system. What are the corresponding oscillation frequencies? **(13)**	**BTL 3**	Apply	CO4
3.	**(i)** Examine the stability of the system whose characteristic equation is given by $s^5 + 4s^4 + 8s^3 + 8s^2 + 7s + 4 = 0$. Using Routh Hurwitz criterion. **(6)** (ii) Assume any four different pole locations for a system, sketch the response and comment on stability of each case**(7)**	**BTL 2**	Understand	CO4
4.	Write the procedure for lag lead compensator using bode plot in detail. **(13)**	**BTL 1**	Remember	CO4
5.	Sketch the Nyquist plot for the System whose open loop transfer function is $G(s) = \dfrac{K}{s(s+2)(s+10)}$.Determine the range of K for which the closed loop System is Stable. **(13)**	**BTL 3**	Apply	CO4
6.	Consider the closed loop system shown in figure point out the range of K for the system which is stable. **(13)** 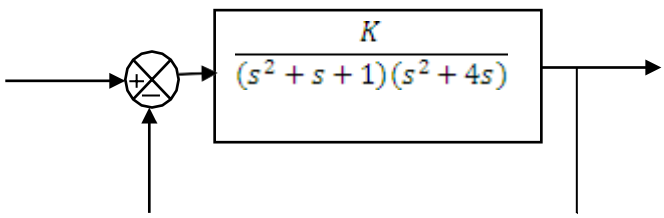	**BTL 4**	Analyze	CO4
7.	From the first principles explain how you obtain the stability of a linear system using Nyquist criterion. **(13)**	**BTL 4**	Analyze	CO4

8.	For each of the characteristics equation of feedback control system given, determine the range of K for stability. Examine the value of K so that the system is marginally stable and the frequency of sustained oscillations. **(13)** **(i)** $s^4 + 25s^3 + 15s^2 + 20s + K = 0.$ **(ii)** $s^3 + 3Ks^2 + (K+2)s + 4 = 0.$	**BTL 1**	Remember	CO4
9.	**(i)** Use the routh stability criterion, determine the range of K for stability of unity feedback system whose open loop transfer function is $G(s) = \dfrac{K}{s(s+1)(s+2)}$. **(10)**	**BTL 3**	Apply	CO4
	(ii) State Routh Stability criterion. **(3)**	**BTL 2**	Understand	CO4
10.	By use of the Nyquist criterion, discuss whether closed-loop systems having the following open-loop transfer function is stableor not. If not, how many closed loop poles lies in the right half of s-plane? **(13)** $G(s)H(s) = \dfrac{10}{s(s+1)(2s+1)}$.	**BTL 2**	Understand	CO4

PART - C				
1.	Sketch the Nyquist plot for a system and find the stability, whose open loop transfer function is given by $G(s) = \frac{10}{s^2(s+2)}$. **(15)**	**BTL 5**	Evaluate	CO4
2.	Sketch the root locus of the system whose forward transfer function is $G(s) = K(S+1) / S(S^2+5S+20)$	**BTL 3**	Apply	CO4

UNIT-V CONTROL SYSTEM ANALYSIS USING STATE VARIABLE METHODS

State variable representation-Conversion of state variable models to transfer functions-Conversion of transfer functions to state variable models-Solution of state equations-Concepts of Controllability and Observability-Stability of linear systems-Equivalence between transfer function and state variable representations-State variable analysis of digital control system-Digital control design using state feedback.

PART – A

Q.no	Questions	BT Level	Competence	Course Outcome
1.	Sketch the block diagram representation of a state model.	**BTL 3**	Apply	CO5
2.	Obtain the state space model for the given differential equation $\frac{d^3Y}{dt^2} + 6\frac{d^2Y}{dt^2} + 11\frac{dY}{dt} + 6Y = U(t)$. Evaluate the transfer function model.	**BTL 1**	Remember	CO 5
3.	Consider a system whose transfer function is given by $\frac{Y(s)}{U(s)} = \frac{10}{s^3 + 6s^2 + 5s + 10}$. Solve and obtain a state model for this system.	**BTL 1**	Remember	CO5
4.	Discuss state and state variable.	**BTL 2**	Understand	CO5
5.	When do you say that a system is completely state controllable?	**BTL 1**	Remember	CO5

6.	List the advantages of state space analysis.	**BTL 1**	Remember	CO 5
7.	Give the condition for controllability by Kalman's method.	**BTL 2**	Understand	CO 5
8.	State the condition for observability by Gilberts method.	**BTL 3**	Apply	CO 5
9.	Write the homogeneous and non homogeneous state equation.	**BTL 1**	Remember	CO5
10.	Analyze the concept of controllability.	**BTL 4**	Analyze	CO5
11.	How is pole placement done by state feedback in a sampled data system?	**BTL 3**	Apply	CO 5
12.	Formulate the necessary condition to be satisfied for designing state feedback.	**BTL 5**	Evaluate	CO5
13.	Point out the limitations of physical system modelled by transfer function approach.	**BTL 4**	Analyze	CO5
14.	State the mechanism in control engineering which implies an ability to measure the state by taking measurements at output.	**BTL 1**	Remember	CO 5
15.	Give the need of observability test.	**BTL 2**	Understand	CO5
16.	Write the properties of state transition matrix.	**BTL 6**	Create	CO 5
17.	Give the types of systems that can be analysed through state space analysis.	**BTL 2**	Understand	CO 5
18.	Analyze the concept of canonical form of state model.	**BTL 4**	Analyze	CO5
19.	Design the state model of a linear time invariant system.	**BTL 6**	Create	CO5
20.	Evaluate the effect of state feedback.	**BTL 5**	Evaluate	CO5
	PART – B			
1.	Consider a linear system described by the transfer function. $\frac{Y(s)}{U(s)} = \frac{5}{s(s+2)(s+3)}$. Design a feedback controller with a state feedback so that the closed loop poles are placed at -1, -2±2j. **(13)**	**BTL 5**	Evaluate	CO 5
2.	Explain with neat diagram, the working of DC and AC tacho generators. **(13)**	**BTL 2**	Understand	CO 5
3.	Consider the following RLC series circuit shown in Fig and obtain its state model.	**BTL 2**	Understand	CO5

	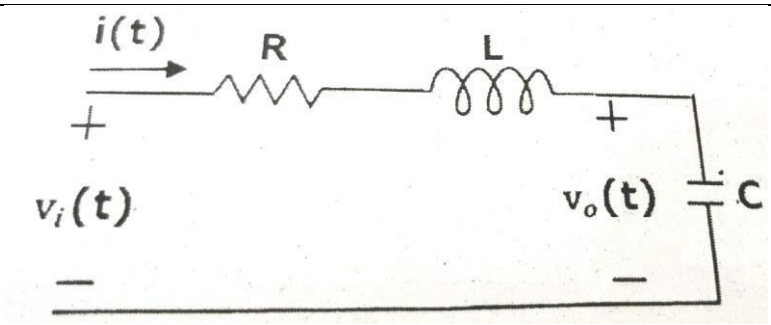			
4.	Obtain the state space representation of Armature controlled dc motorandField controlled dc motor. **(13)**	**BTL 4**	Analyze	CO 5
5.	Examine the controllability and observability of a system having following coefficient matrices.**(13)** $A=\begin{bmatrix}0 & 1 & 0\\ 0 & 0 & 1\\ -6 & -11 & -6\end{bmatrix}; B=\begin{bmatrix}1\\0\\1\end{bmatrix}; C^T=\begin{bmatrix}10\\5\\1\end{bmatrix}$	**BTL 1**	Remember	CO 5
6.	List the state equation for the system shown below in which x_1, x_2 and x_3 constitute the state vectors. Examine whether the system is completely controllable and observable.**(13)**	**BTL 3**	Apply	CO5
7.	Consider a control system with state model $\begin{bmatrix}\dot{x}_1\\ \dot{x}_2\end{bmatrix}=\begin{bmatrix}0 & 1\\ -2 & -3\end{bmatrix}\begin{bmatrix}x_1\\ x_2\end{bmatrix}+\begin{bmatrix}0\\2\end{bmatrix}u;$ $\begin{bmatrix}x_1(0)\\ x2(0)\end{bmatrix}=\begin{bmatrix}0\\1\end{bmatrix};$ Compute the state transition matrix.**(13)**	**BTL 3**	Apply	CO 5
8.	Consider the following plant of the state space representation: Examine the controllability and observability of a state space formed by the system. **(13)** $A=\begin{bmatrix}0 & 1\\ -2 & -3\end{bmatrix}; B=\begin{bmatrix}-2\\2\end{bmatrix}; C=\begin{bmatrix}-2 & 0\end{bmatrix}$	**BTL 1**	Remember	CO 5

9.	Examine the controllability and observability of the system with state equation. **(13)** $\begin{bmatrix} \dot{x}_1 \\ \dot{x}_2 \\ \dot{x}_3 \end{bmatrix} = \begin{bmatrix} 0 & 1 & 0 \\ 0 & 0 & 1 \\ 0 & -2 & -3 \end{bmatrix} \begin{bmatrix} x_1 \\ x_2 \\ x_3 \end{bmatrix} + \begin{bmatrix} 0 \\ 0 \\ 1 \end{bmatrix} u;$ $y = \begin{bmatrix} 3 & 4 & 1 \end{bmatrix} \begin{bmatrix} x_1 \\ x_2 \\ x_3 \end{bmatrix}$	**BTL 1**	Remember	CO 5
10.	A system is characterized by the transfer function $\frac{Y(s)}{U(s)} = \frac{3}{(s^3 + 5s^2 + 11s + 6)}$ Express whether or not the system is completely controllable and observable also identify the first state as output.**(13)**	**BTL 2**	Understand	CO 5
11.	Obtain the complete solution of non homogeneous state equation using time domain method**.** **(13)**	**BTL 6**	Create	CO 5
12.	Express the canonical state model of the system, whose transfer function is $T(s) = \frac{2(s+5)}{(s+2)(s+3)(s+4)}$ **(13)**	**BTL 2**	Understand	CO5
13.	Examine the controllability and observability of the following state space system.**(13)** $\dot{x}_1 = x_2 + u_2$ $\dot{x}_2 = x_3$ $\dot{x}_3 = -2x_2 - 3x_3 + u_1 + u_2$	**BTL 1**	Remember	CO 5
14.	**(i)** Derive the transfer function model for the following state space system.**(7)**	**BTL 1**	Remember	CO 5

	$A=\begin{bmatrix}0 & 1\\ -6 & -5\end{bmatrix}; B=\begin{bmatrix}1\\ 0\end{bmatrix}; C=\begin{bmatrix}1 & 0\end{bmatrix}; D=\begin{bmatrix}0\end{bmatrix}$			
	(ii) Find the state transition matrix for the state model whose system matrix A is given by $A=\begin{bmatrix}1 & 1\\ 0 & 1\end{bmatrix}$ **(6)**	**BTL 3**	Apply	CO 5
	PART C			
1.	Test the controllability and observability of the system with state equation. **(15)** $\begin{bmatrix}\dot{x}_1\\ \dot{x}_2\\ \dot{x}_3\end{bmatrix}=\begin{bmatrix}-1 & 0 & 0\\ 1 & -2 & 0\\ 2 & 1 & -3\end{bmatrix}\begin{bmatrix}x_1\\ x_2\\ x_3\end{bmatrix}+\begin{bmatrix}10\\ 1\\ 0\end{bmatrix}u;$ $y=\begin{bmatrix}1 & 0 & 0\end{bmatrix}\begin{bmatrix}x_1\\ x_2\\ x_3\end{bmatrix}$	**BTL 4**	Analyze	CO 5
2.	(i) Given that $A_1=\begin{bmatrix}\sigma & 0\\ 0 & \sigma\end{bmatrix}; A_2=\begin{bmatrix}0 & \omega\\ -\omega & 0\end{bmatrix}; A_2=\begin{bmatrix}\sigma & \omega\\ -\omega & \sigma\end{bmatrix}$; Compute state transition matrix.**(8)** **(ii)** Explain the concepts of controllability and observability**.** **(7)**	**BTL 4**	Analyze	CO 5
3.	**(i)** Determine whether the system described by the following state model is completely controllable and observable.**(8)** $\dot{x}(t)=\begin{bmatrix}0 & 0 & 1\\ -2 & -3 & 0\\ 0 & 2 & -3\end{bmatrix}\begin{bmatrix}x_1(t)\\ x_2(t)\\ x_3(t)\end{bmatrix}+\begin{bmatrix}0\\ 2\\ 0\end{bmatrix}u(t);$ $y(t)=\begin{bmatrix}1 & 0 & 0\end{bmatrix}\begin{bmatrix}x_1(t)\\ x_2(t)\\ x_3(t)\end{bmatrix}$ **(ii)** What are state variables? Explain the state space formulation with its equation. **(7)**	**BTL 6**	Create	CO 5

4.	Determine the state variable representation of the system whose transfer function is given as $\frac{Y(s)}{U(s)} = \frac{2s^2 + 8s + 7}{(s+2)^2(s+1)}$. **(15)**	**BTL 6**	Create	CO 5

COURSE OUTCOMES:

CO1: Compute the transfer function of different physical systems.

CO2: Analyse the time domain specification and calculate the steady state error.

CO3: Illustrate the frequency response characteristics of open loop and closed loop system response.

CO4: Analyse the stability using Routh and root locus techniques.

CO5: Illustrate the state space model of a physical system and discuss the concepts of sampled data control system.